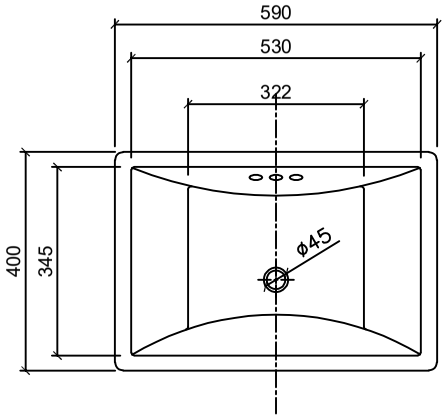

TOP VIEW

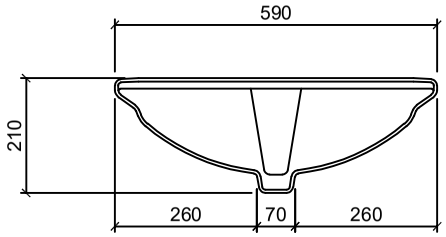

FRONT VIEW

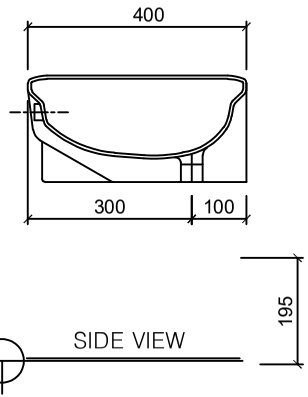

SIDE VIEW

bathday

나만의 힐링디자인_바스데이

제 품 명 : BW1102

MEMO.

–

NO	DATE	DESCRIPTION

ISSUES & REVISION

APPROVED BY. (승인)		
CHECKED BY. (검토)		
CHECKED BY. (검토)		
CHECKED BY. (검토)		
DRAWN BY. (작성)		
DATE. (날짜)		
SCALE. (축척)		
SHEET NO. (도면매수 번호)		
DRAWING NO. (도면번호)		

DRAWING NAME. BW7028

SIZE. W : 600 * D : 420 * H : 220